GA-25RVT
OCT. 1963
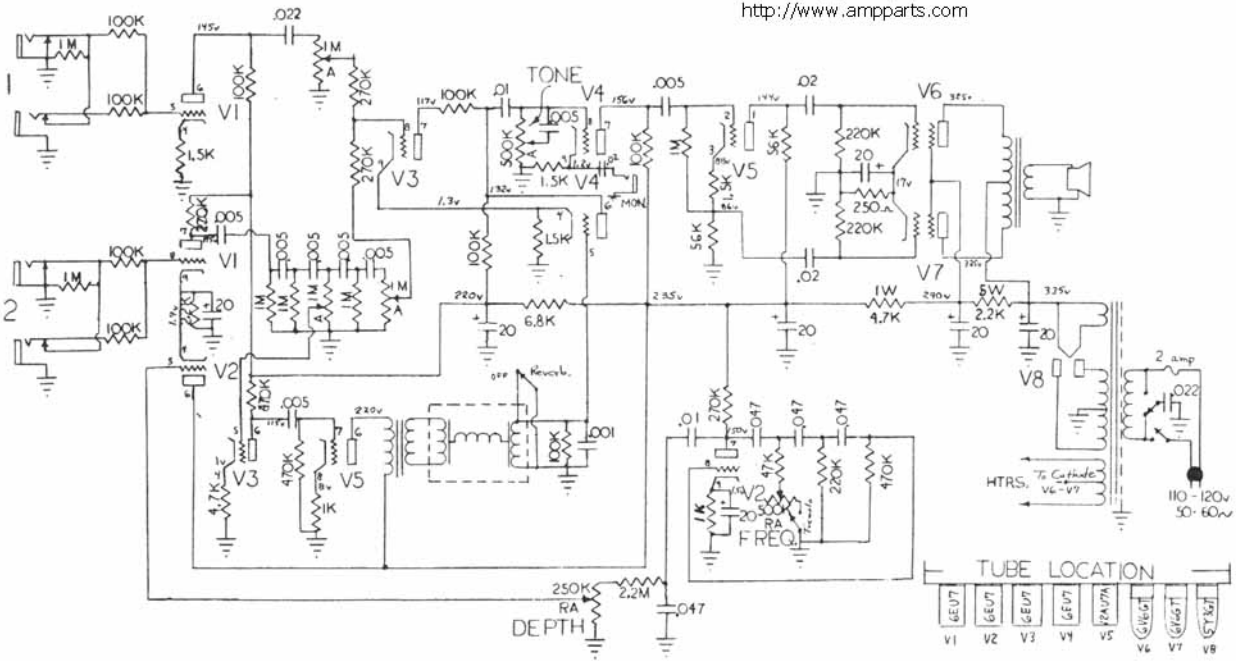
For Parts Call
Parts is Parts
800-590-0014
802-464-0014
email info@guitar-parts.com
http://www.ampparts.com